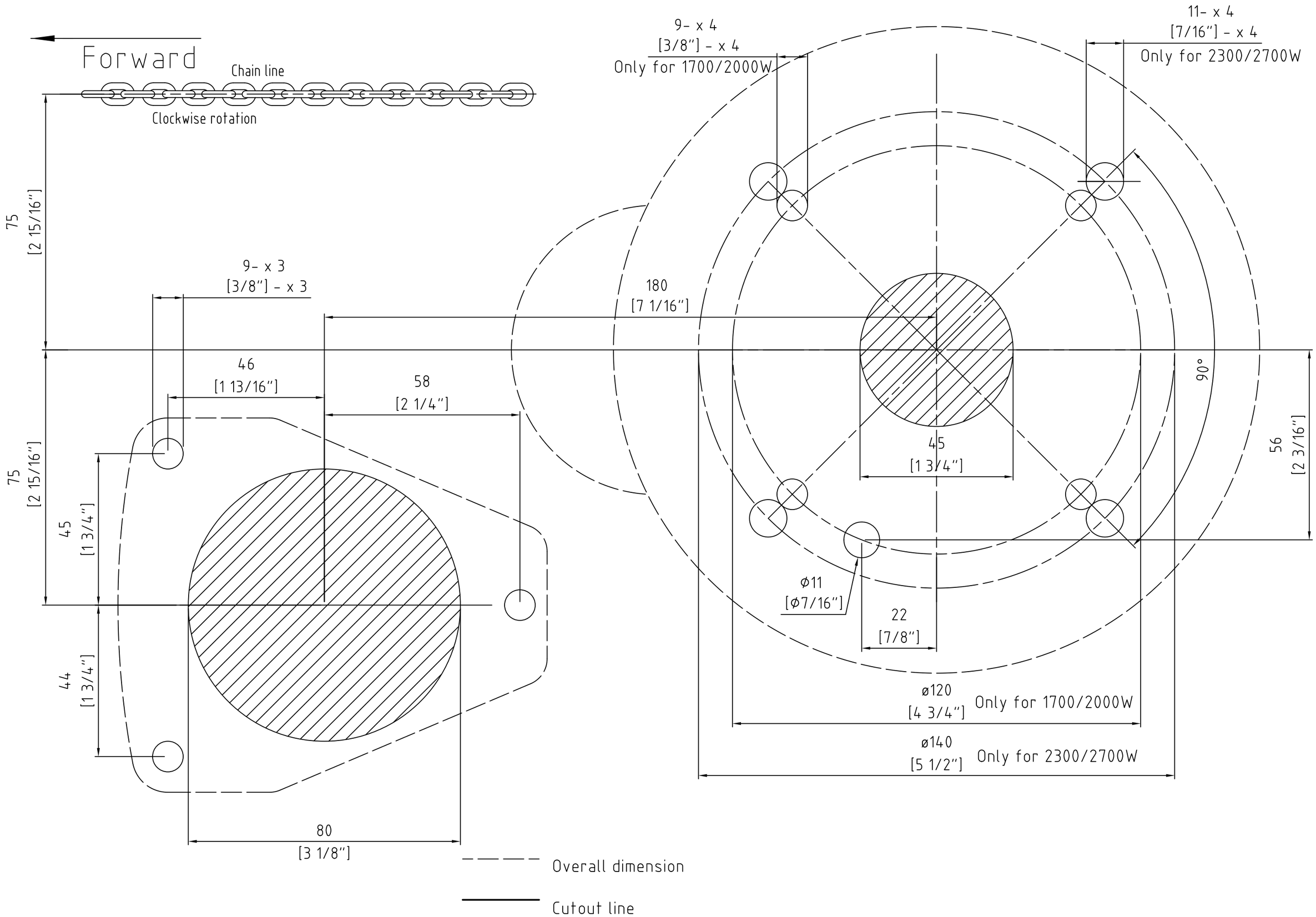
Forward
Chain line
Clockwise rotation
9- x 4
[3/8"] - x 4
Only for 1700/2000W
11- x 4
[7/16"] - x 4
Only for 2300/2700W
75
[2 15/16"]
9- x 3
[3/8"] - x 3
180
[7 1/16"]
46
[1 13/16"]
58
[2 1/4"]
45
[1 3/4"]
90°
56
[2 3/16"]
75
[2 15/16"]
45
[1 3/4"]
44
[1 3/4"]
ø11
[ø7/16"]
22
[7/8"]
ø120
[4 3/4"]
Only for 1700/2000W
ø140
[5 1/2"]
Only for 2300/2700W
80
[3 1/8"]
Overall dimension
Cutout line